Bearing unit UCT202 J KOYO

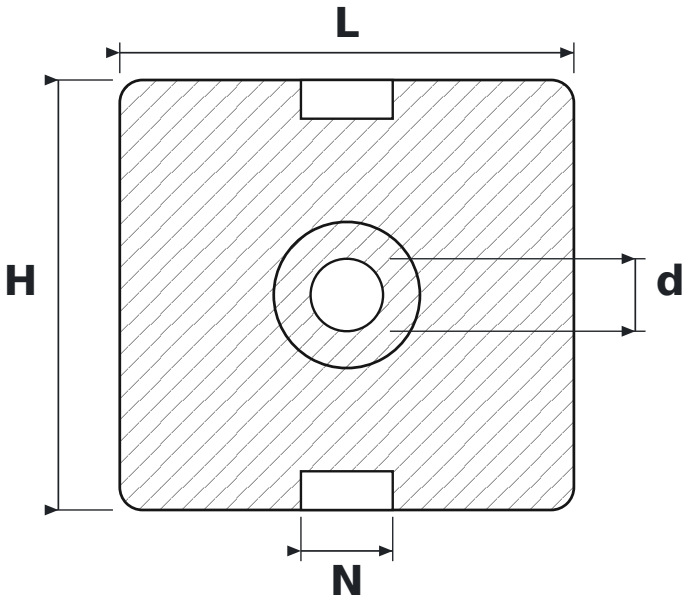

DIMENSIONS

d	shaft diameter	**15 mm**
L	housing length	**94 mm**
H	housing height	**89 mm**
N	guide slot width	**19 mm**

SPECIFICATIONS

Manufacturer	**KOYO**
Manufacturer designation	**UCT202 J**
Rolling elements	**single-row ball bearing**