Bearing unit UCT204-J7 FAG

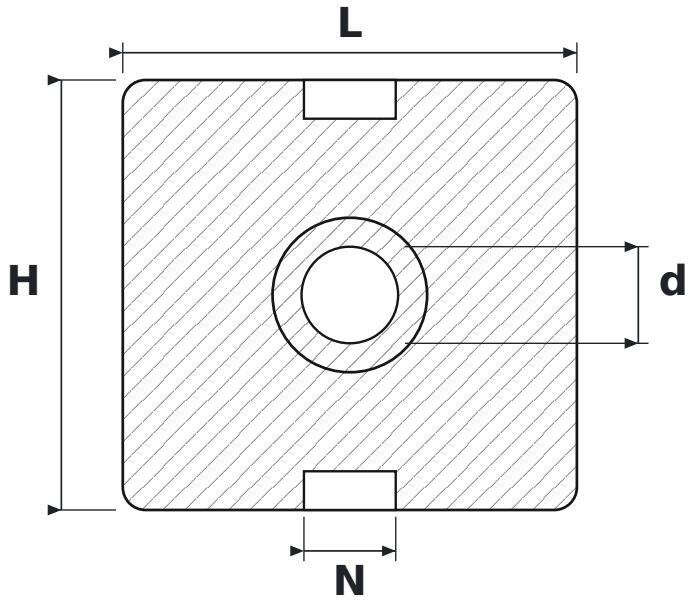

DIMENSIONS

d	shaft diameter	**20 mm**
L	housing length	**94 mm**
H	housing height	**89 mm**
N	guide slot width	**19 mm**

SPECIFICATIONS

Manufacturer	**FAG**
Manufacturer designation	**UCT204-J7**
Rolling elements	**single-row ball bearing**