Bearing unit UCT205-100 NKE

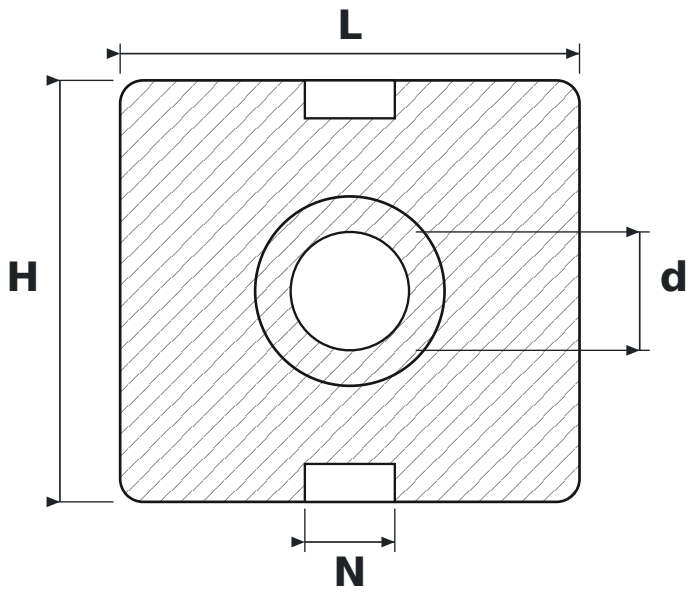

DIMENSIONS

d	shaft diameter	**25 mm**
L	housing length	**97 mm**
H	housing height	**89 mm**
N	guide slot width	**19 mm**

SPECIFICATIONS

Manufacturer	**NKE**
Manufacturer designation	**UCT205-100**
Rolling elements	**single-row ball bearing**