# Bearing unit UCT206 NSK

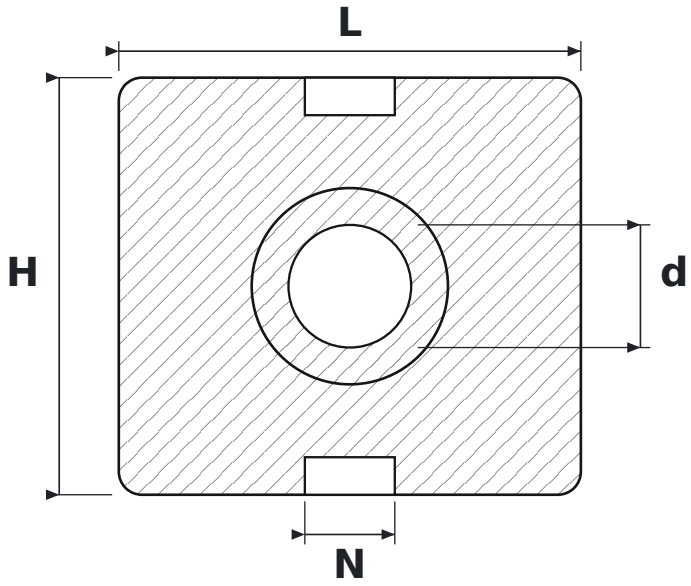


## DIMENSIONS

| | | |
|---|---|---|
| **d** | shaft diameter | **30 mm** |
| **L** | housing length | **113 mm** |
| **H** | housing height | **102 mm** |
| **N** | guide slot width | **22 mm** |

## SPECIFICATIONS

| | |
|---|---|
| Manufacturer | **NSK** |
| Manufacturer designation | **UCT206** |
| Rolling elements | **single-row ball bearing** |