Bearing unit UCT206 TIMKEN

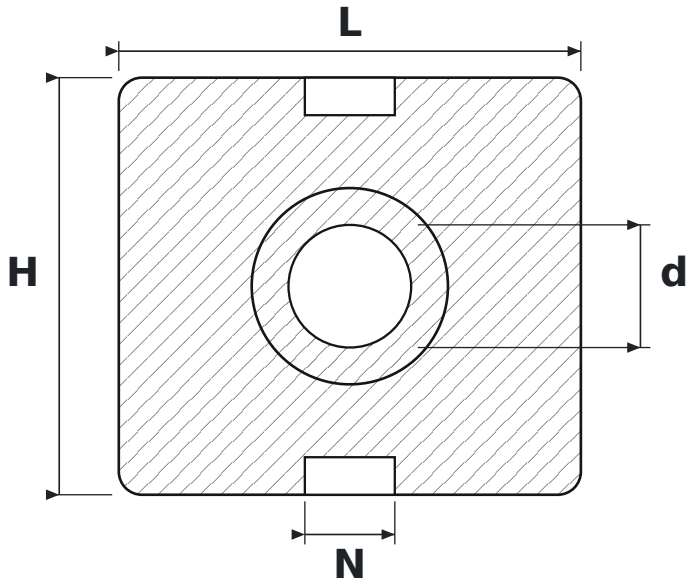

DIMENSIONS

d	shaft diameter	**30 mm**
L	housing length	**113 mm**
H	housing height	**102 mm**
N	guide slot width	**22 mm**

SPECIFICATIONS

Manufacturer	**TIMKEN**
Manufacturer designation	**UCT206**
Rolling elements	**single-row ball bearing**