Bearing unit UCT207-J7 FAG

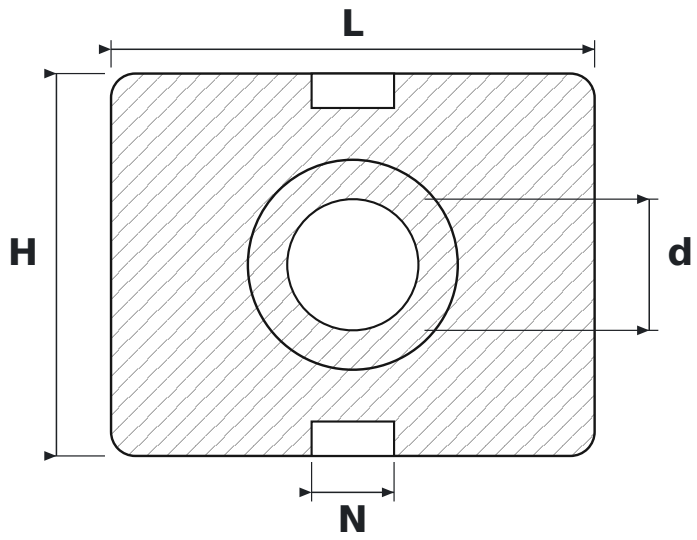

DIMENSIONS

d	shaft diameter	**35 mm**
L	housing length	**129 mm**
H	housing height	**102 mm**
N	guide slot width	**22 mm**

SPECIFICATIONS

Manufacturer	**FAG**
Manufacturer designation	**UCT207-J7**
Rolling elements	**single-row ball bearing**