Bearing unit UCT209 SNR

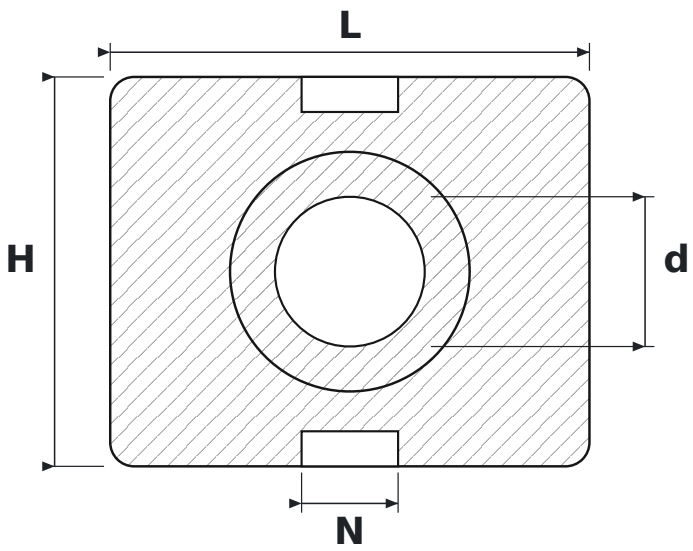

DIMENSIONS

d	shaft diameter	**45 mm**
L	housing length	**144 mm**
H	housing height	**117 mm**
N	guide slot width	**29 mm**

SPECIFICATIONS

Manufacturer	**SNR**
Manufacturer designation	**UCT209**
Rolling elements	**single-row ball bearing**