Bearing unit UCT211 SNR

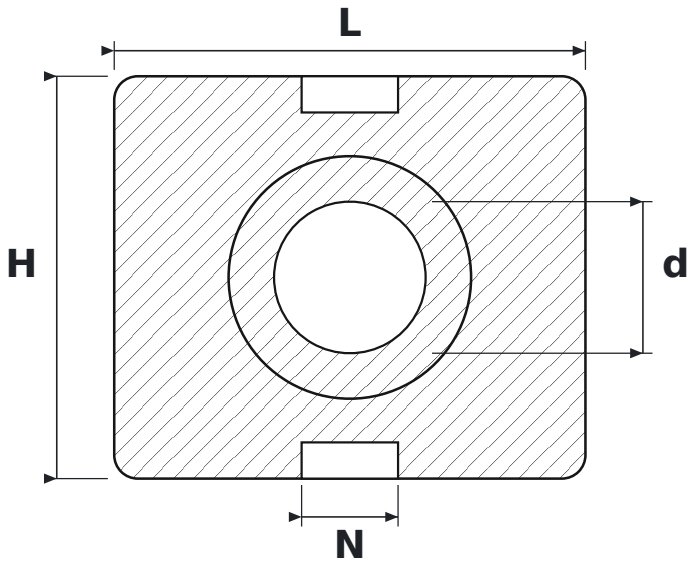

DIMENSIONS

d	shaft diameter	**55 mm**
L	housing length	**171 mm**
H	housing height	**146 mm**
N	guide slot width	**35 mm**

SPECIFICATIONS

Manufacturer	**SNR**
Manufacturer designation	**UCT211**
Rolling elements	**single-row ball bearing**