Bearing unit UCT212 FYH

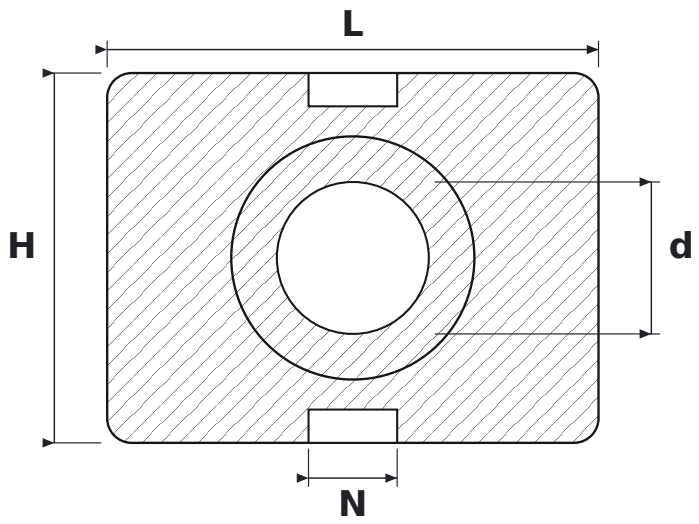

DIMENSIONS

d	shaft diameter	**60 mm**
L	housing length	**194 mm**
H	housing height	**146 mm**
N	guide slot width	**35 mm**

SPECIFICATIONS

Manufacturer	**FYH**
Manufacturer designation	**UCT212**
Rolling elements	**single-row ball bearing**