Bearing unit UCT212-J7 FAG

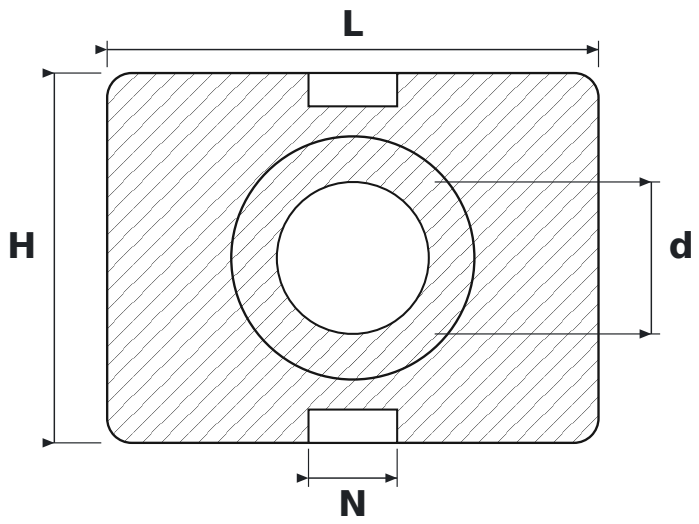

DIMENSIONS

d	shaft diameter	**60 mm**
L	housing length	**194 mm**
H	housing height	**146 mm**
N	guide slot width	**35 mm**

SPECIFICATIONS

Manufacturer	**FAG**
Manufacturer designation	**UCT212-J7**
Rolling elements	**single-row ball bearing**