Bearing unit UCT214 SKF

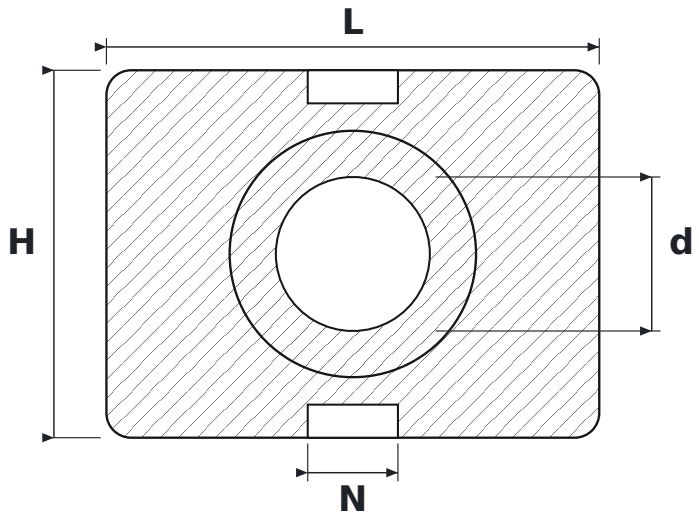

DIMENSIONS

d	shaft diameter	**70 mm**
L	housing length	**224 mm**
H	housing height	**167 mm**
N	guide slot width	**41 mm**

SPECIFICATIONS

Manufacturer	**SKF**
Manufacturer designation	**UCT214**
Rolling elements	**single-row ball bearing**