Bearing unit UCT215 NSK

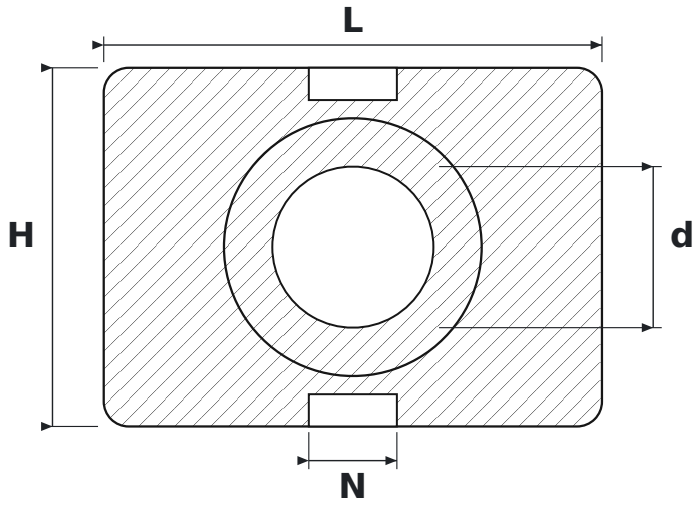

DIMENSIONS

d	shaft diameter	**75 mm**
L	housing length	**232 mm**
H	housing height	**167 mm**
N	guide slot width	**41 mm**

SPECIFICATIONS

Manufacturer	**NSK**
Manufacturer designation	**UCT215**
Rolling elements	**single-row ball bearing**