Bearing unit UCT215 SNR

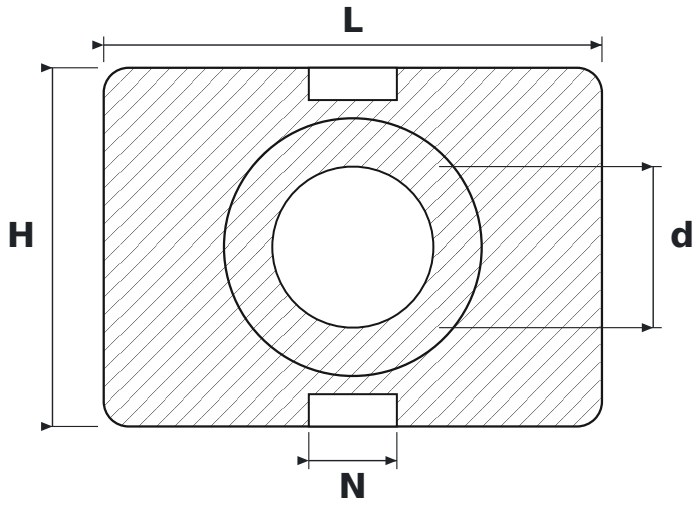

DIMENSIONS

d	shaft diameter	**75 mm**
L	housing length	**232 mm**
H	housing height	**167 mm**
N	guide slot width	**41 mm**

SPECIFICATIONS

Manufacturer	**SNR**
Manufacturer designation	**UCT215**
Rolling elements	**single-row ball bearing**
Mass	**7.33 kg**