Bearing unit UCT312 SNR

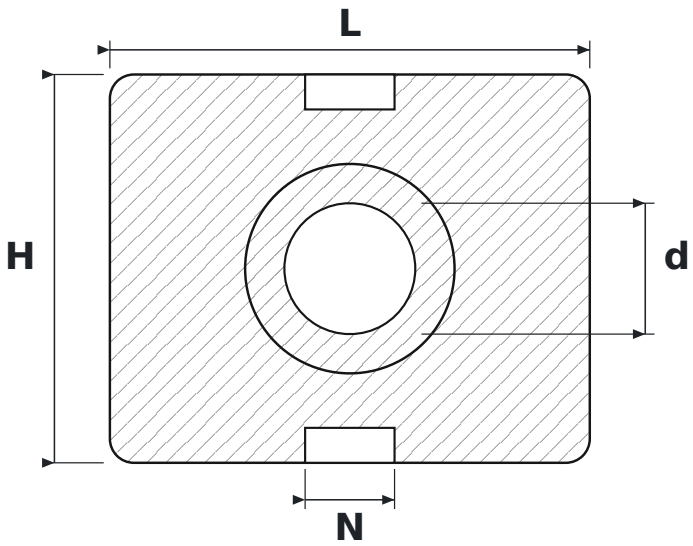

DIMENSIONS

d	shaft diameter	**60 mm**
L	housing length	**220 mm**
H	housing height	**178 mm**
N	guide slot width	**41 mm**

SPECIFICATIONS

Manufacturer	**SNR**
Manufacturer designation	**UCT312**
Rolling elements	**single-row ball bearing**