Bearing unit UCT315 D1 NSK

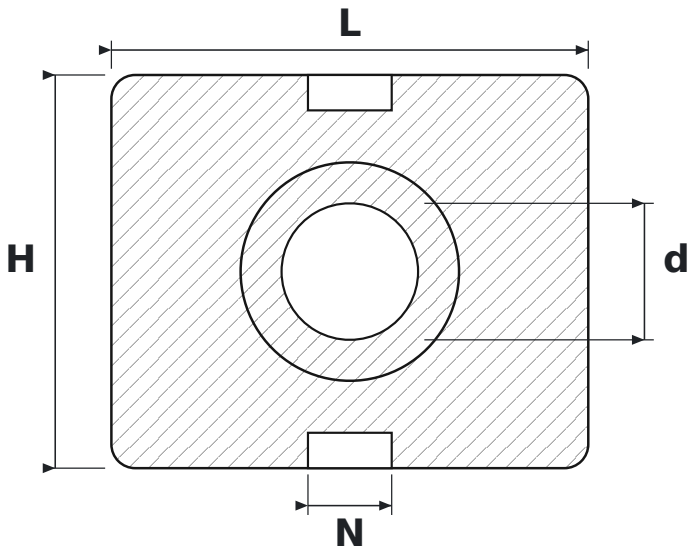

DIMENSIONS

d	shaft diameter	**75 mm**
L	housing length	**262 mm**
H	housing height	**216 mm**
N	guide slot width	**46 mm**

SPECIFICATIONS

Manufacturer	**NSK**
Manufacturer designation	**UCT315 D1**
Rolling elements	**single-row ball bearing**