Bearing unit UCT315 FYH

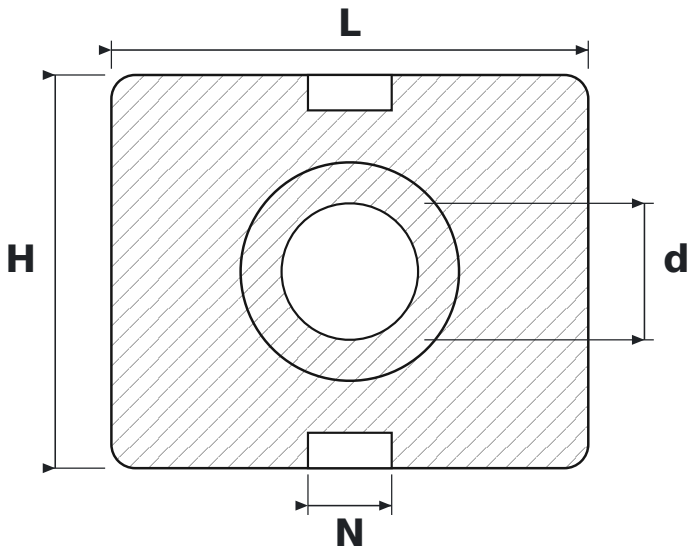

DIMENSIONS

d	shaft diameter	**75 mm**
L	housing length	**262 mm**
H	housing height	**216 mm**
N	guide slot width	**46 mm**

SPECIFICATIONS

Manufacturer	**FYH**
Manufacturer designation	**UCT315**
Rolling elements	**single-row ball bearing**