Bearing unit UCT316 D1 NTN

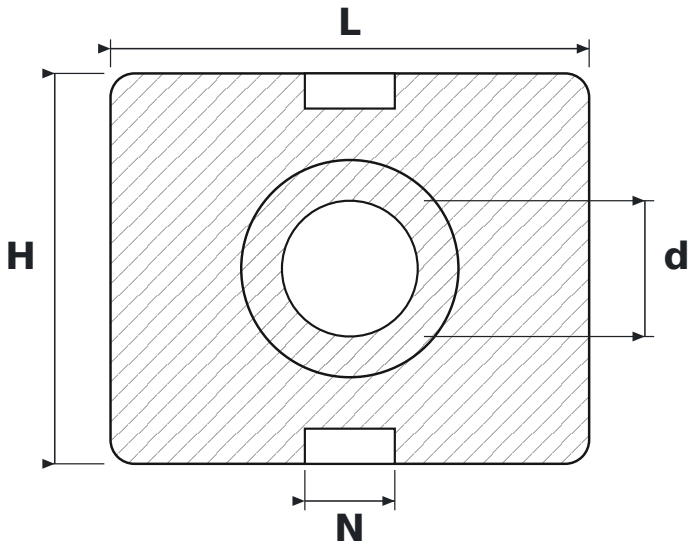

DIMENSIONS

d	shaft diameter	**80 mm**
L	housing length	**282 mm**
H	housing height	**230 mm**
N	guide slot width	**53 mm**

SPECIFICATIONS

Manufacturer	**NTN**
Manufacturer designation	**UCT316 D1**
Rolling elements	**single-row ball bearing**