Bearing unit UCT316 FYH

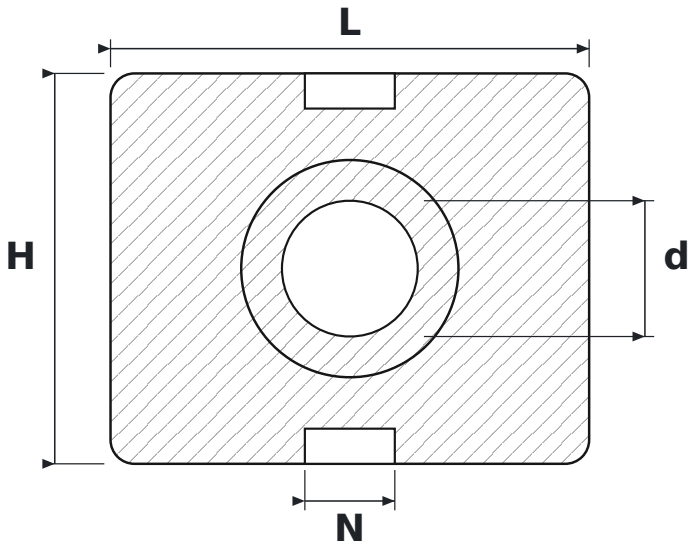

DIMENSIONS

d	shaft diameter	**80 mm**
L	housing length	**282 mm**
H	housing height	**230 mm**
N	guide slot width	**53 mm**

SPECIFICATIONS

Manufacturer	**FYH**
Manufacturer designation	**UCT316**
Rolling elements	**single-row ball bearing**