Bearing unit UCT320 KOYO

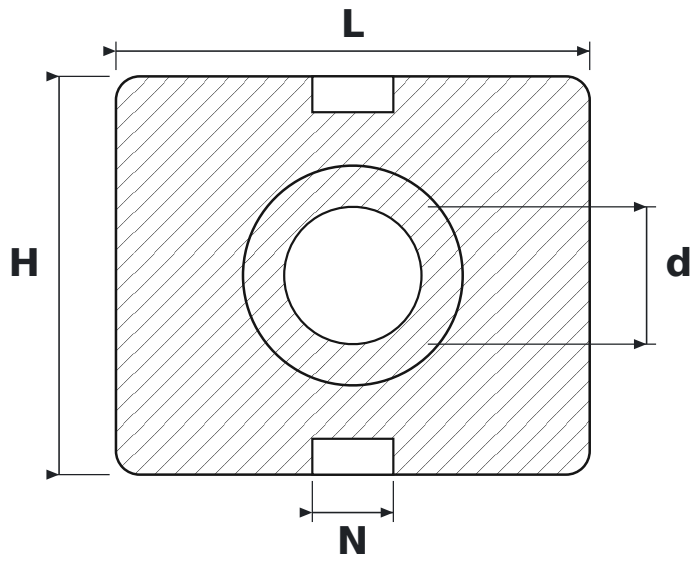

DIMENSIONS

d	shaft diameter	**100 mm**
L	housing length	**345 mm**
H	housing height	**290 mm**
N	guide slot width	**59 mm**

SPECIFICATIONS

Manufacturer	**KOYO**
Manufacturer designation	**UCT320**
Rolling elements	**single-row ball bearing**