Bearing unit UCT322 SNR

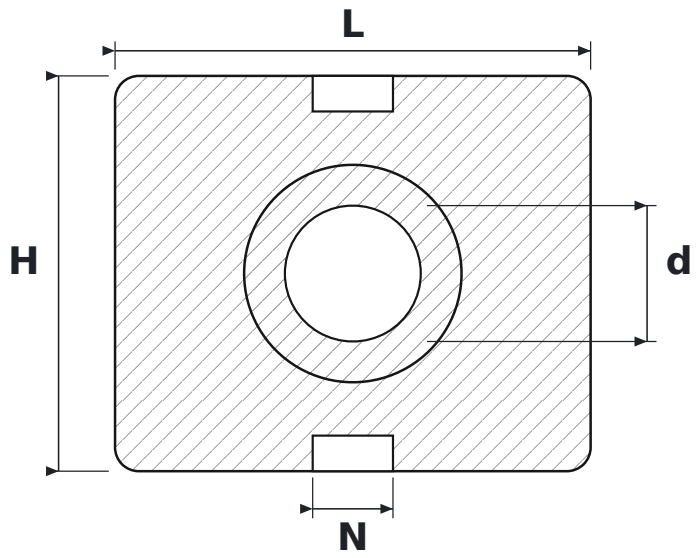

DIMENSIONS

d	shaft diameter	**110 mm**
L	housing length	**385 mm**
H	housing height	**320 mm**
N	guide slot width	**65 mm**

SPECIFICATIONS

Manufacturer	**SNR**
Manufacturer designation	**UCT322**
Rolling elements	**single-row ball bearing**