Bearing unit UCT326 FYH

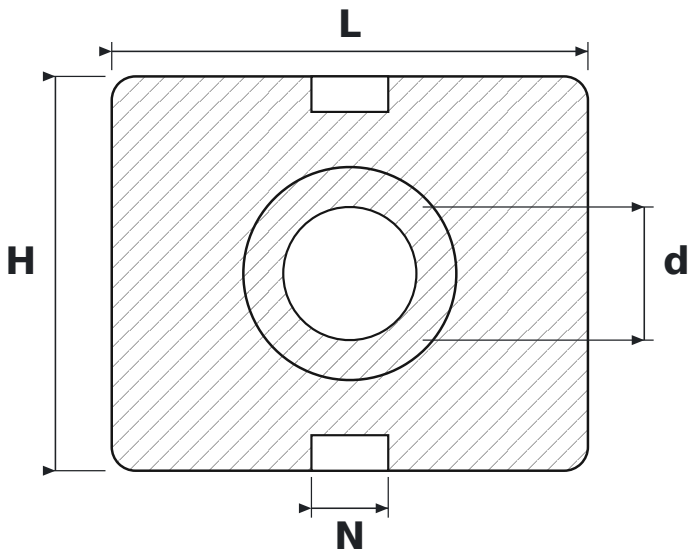

DIMENSIONS

d	shaft diameter	**130 mm**
L	housing length	**465 mm**
H	housing height	**385 mm**
N	guide slot width	**75 mm**

SPECIFICATIONS

Manufacturer	**FYH**
Manufacturer designation	**UCT326**
Rolling elements	**single-row ball bearing**