Bearing unit UKC206 NSK

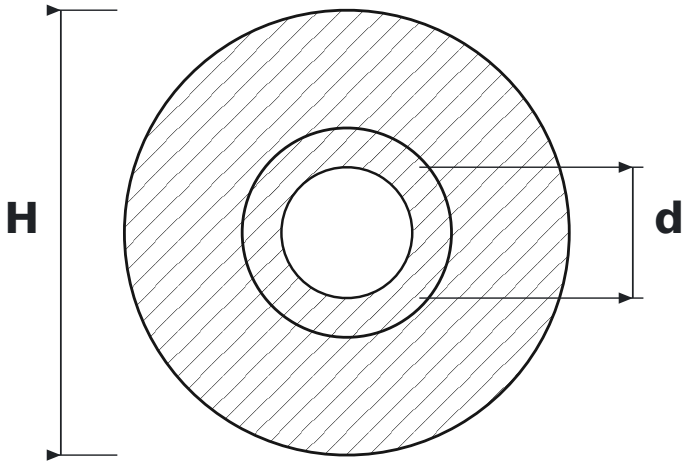

DIMENSIONS

d	shaft diameter	**25 mm**
H	housing diameter	**85 mm**

SPECIFICATIONS

Manufacturer	**NSK**
Manufacturer designation	**UKC206**
Rolling elements	**single-row ball bearing**
Mass	**1.8 kg**