CASTOMER

DATASHEET

Bearing unit UKF205 J FYH

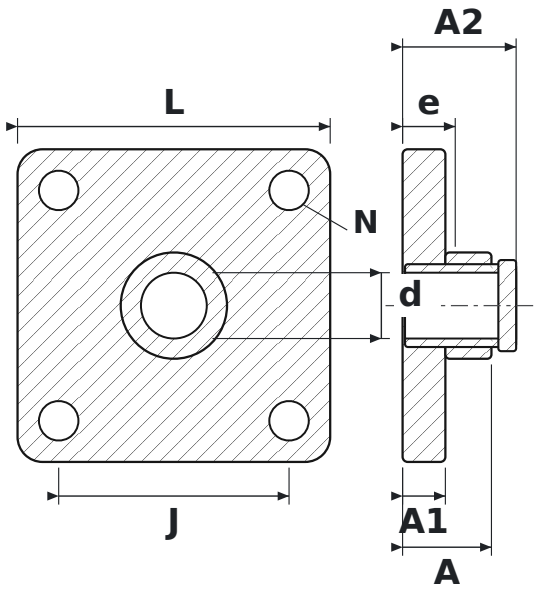

DIMENSIONS

d	shaft diameter	**20 mm**
L	housing length	**95 mm**
J	bolt hole spacing	**70 mm**
N	bolt hole diameter	**12 mm**
A	overall housing width (from mounting face)	**27 mm**
A1	flange thickness	**13 mm**
A2	overall length incl. protruding inner ring	**34.5 mm**
e	mounting face to bearing centre	**16 mm**

SPECIFICATIONS

Manufacturer	**FYH**
Manufacturer designation	**UKF205 J**
Rolling elements	**single-row ball bearing**