Bearing unit UKF207 D1 NSK

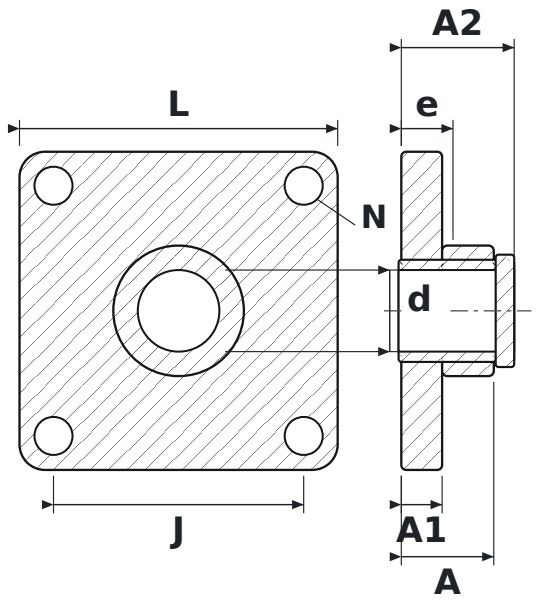

DIMENSIONS

d	shaft diameter	**30 mm**
L	housing length	**117 mm**
J	bolt hole spacing	**92 mm**
N	bolt hole diameter	**14 mm**
A	overall housing width (from mounting face)	**34 mm**
A1	flange thickness	**15 mm**
A2	overall length incl. protruding inner ring	**41.5 mm**
e	mounting face to bearing centre	**19 mm**

SPECIFICATIONS

Manufacturer	**NSK**
Manufacturer designation	**UKF207 D1**
Rolling elements	**single-row ball bearing**