Bearing unit UKF208-J7 FAG

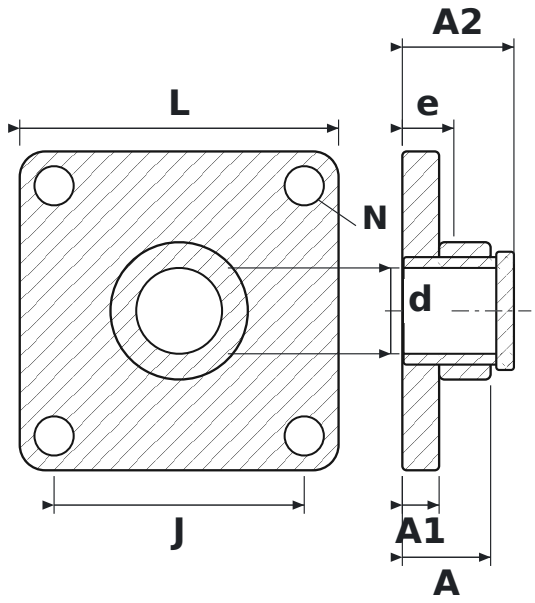

DIMENSIONS

d	shaft diameter	**35 mm**
L	housing length	**130 mm**
J	bolt hole spacing	**102 mm**
N	bolt hole diameter	**16 mm**
A	overall housing width (from mounting face)	**36 mm**
A1	flange thickness	**15 mm**
A2	overall length incl. protruding inner ring	**45.5 mm**
e	mounting face to bearing centre	**21 mm**

SPECIFICATIONS

Manufacturer	**FAG**
Manufacturer designation	**UKF208-J7**
Rolling elements	**single-row ball bearing**