Bearing unit UKF213 NKE

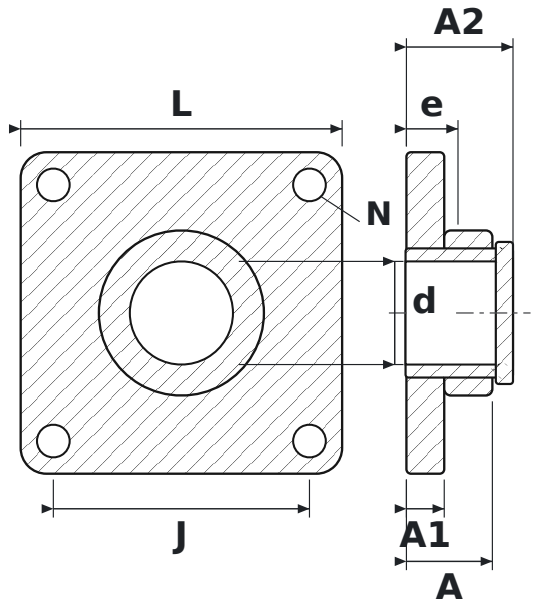

DIMENSIONS

d	shaft diameter	**60 mm**
L	housing length	**187 mm**
J	bolt hole spacing	**149 mm**
N	bolt hole diameter	**19 mm**
A	overall housing width (from mounting face)	**50 mm**
A1	flange thickness	**22 mm**
A2	overall length incl. protruding inner ring	**62 mm**
e	mounting face to bearing centre	**30 mm**

SPECIFICATIONS

Manufacturer	**NKE**
Manufacturer designation	**UKF213**
Rolling elements	**single-row ball bearing**