Bearing unit UKF216 FYH

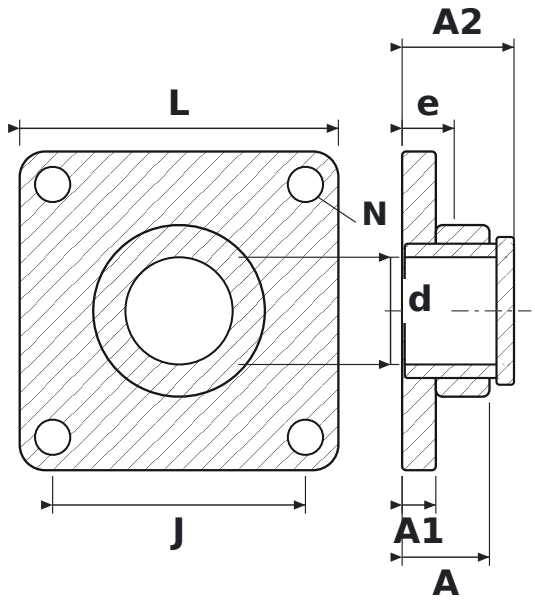

DIMENSIONS

d	shaft diameter	**70 mm**
L	housing length	**208 mm**
J	bolt hole spacing	**165 mm**
N	bolt hole diameter	**23 mm**
A	overall housing width (from mounting face)	**57 mm**
A1	flange thickness	**22 mm**
A2	overall length incl. protruding inner ring	**73 mm**
e	mounting face to bearing centre	**34 mm**

SPECIFICATIONS

Manufacturer	**FYH**
Manufacturer designation	**UKF216**
Rolling elements	**single-row ball bearing**