Bearing unit UKF218-J7 FAG

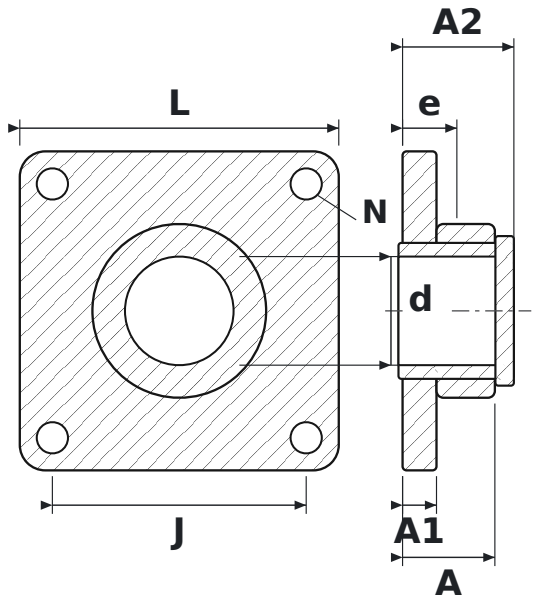

DIMENSIONS

d	shaft diameter	**80 mm**
L	housing length	**235 mm**
J	bolt hole spacing	**187 mm**
N	bolt hole diameter	**23 mm**
A	overall housing width (from mounting face)	**68 mm**
A1	flange thickness	**25 mm**
A2	overall length incl. protruding inner ring	**82 mm**
e	mounting face to bearing centre	**40 mm**

SPECIFICATIONS

Manufacturer	**FAG**
Manufacturer designation	**UKF218-J7**
Rolling elements	**single-row ball bearing**