Bearing unit UKF311 D1 NTN

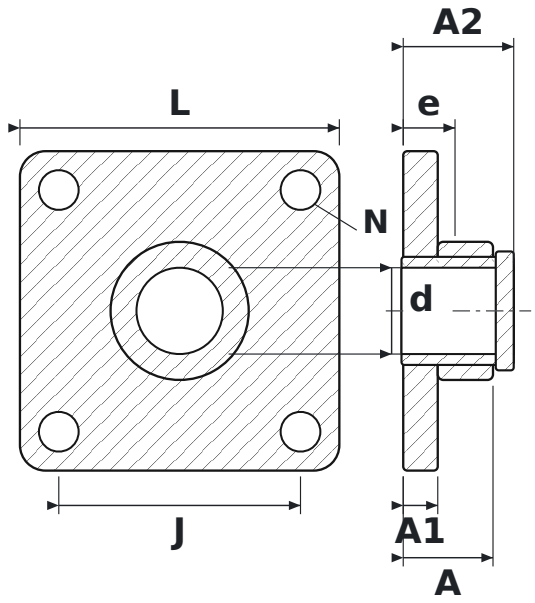

DIMENSIONS

d	shaft diameter	**50 mm**
L	housing length	**185 mm**
J	bolt hole spacing	**140 mm**
N	bolt hole diameter	**23 mm**
A	overall housing width (from mounting face)	**52 mm**
A1	flange thickness	**20 mm**
A2	overall length incl. protruding inner ring	**64 mm**
e	mounting face to bearing centre	**30 mm**

SPECIFICATIONS

Manufacturer	**NTN**
Manufacturer designation	**UKF311 D1**
Rolling elements	**single-row ball bearing**
Mass	**5.5 kg**