Bearing unit UKF313 D1 NTN

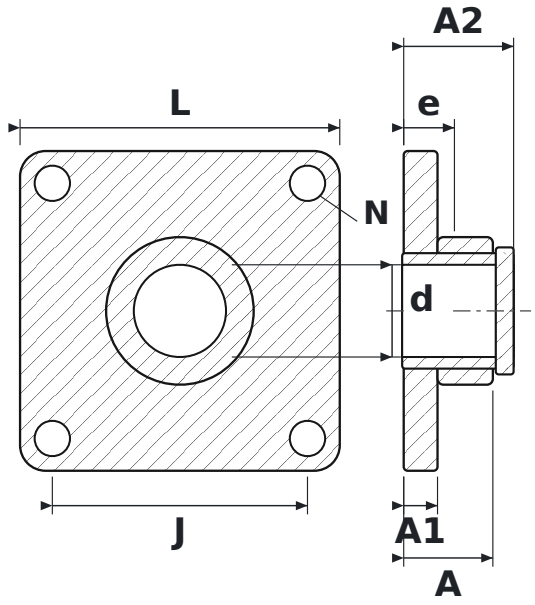

DIMENSIONS

d	shaft diameter	**60 mm**
L	housing length	**208 mm**
J	bolt hole spacing	**166 mm**
N	bolt hole diameter	**23 mm**
A	overall housing width (from mounting face)	**58 mm**
A1	flange thickness	**22 mm**
A2	overall length incl. protruding inner ring	**71.5 mm**
e	mounting face to bearing centre	**33 mm**

SPECIFICATIONS

Manufacturer	**NTN**
Manufacturer designation	**UKF313 D1**
Rolling elements	**single-row ball bearing**