# Bearing unit UKF315 D1 NTN

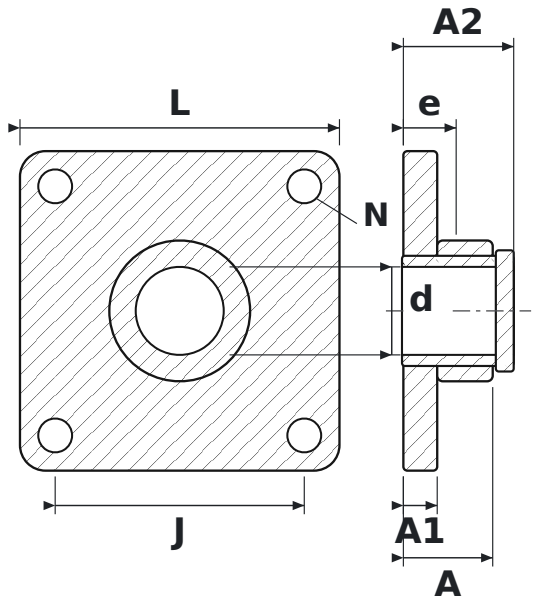


## DIMENSIONS

| | | |
|---|---|---|
| **d** | shaft diameter | **65 mm** |
| **L** | housing length | **236 mm** |
| **J** | bolt hole spacing | **184 mm** |
| **N** | bolt hole diameter | **25 mm** |
| **A** | overall housing width (from mounting face) | **66 mm** |
| **A1** | flange thickness | **25 mm** |
| **A2** | overall length incl. protruding inner ring | **81.5 mm** |
| **e** | mounting face to bearing centre | **39 mm** |

## SPECIFICATIONS

| | |
|---|---|
| Manufacturer | **NTN** |
| Manufacturer designation | **UKF315 D1** |
| Rolling elements | **single-row ball bearing** |