Bearing unit UKFC207 NKE

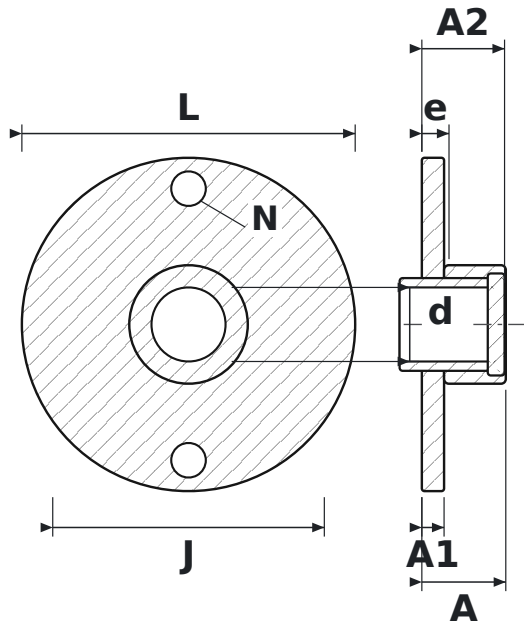

DIMENSIONS

d	shaft diameter	**30 mm**
L	housing length	**135 mm**
J	bolt hole spacing	**110 mm**
N	bolt hole diameter	**14 mm**
A	overall housing width (from mounting face)	**34 mm**
A1	flange thickness	**9 mm**
A2	overall length incl. protruding inner ring	**33.5 mm**
e	mounting face to bearing centre	**11 mm**

SPECIFICATIONS

Manufacturer	**NKE**
Manufacturer designation	**UKFC207**
Rolling elements	**single-row ball bearing**