Bearing unit UKFC209 H SNR

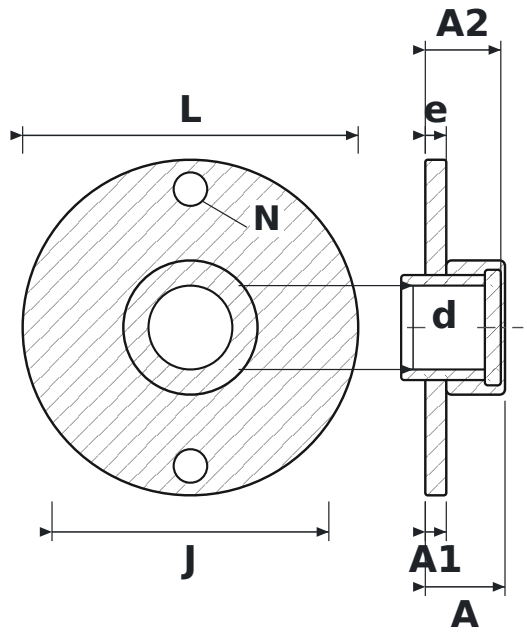

DIMENSIONS

d	shaft diameter	**40 mm**
L	housing length	**160 mm**
J	bolt hole spacing	**132 mm**
N	bolt hole diameter	**16 mm**
A	overall housing width (from mounting face)	**38 mm**
A1	flange thickness	**10 mm**
A2	overall length incl. protruding inner ring	**36 mm**
e	mounting face to bearing centre	**10 mm**

SPECIFICATIONS

Manufacturer	**SNR**
Manufacturer designation	**UKFC209 H**
Rolling elements	**single-row ball bearing**