# Bearing unit UKFC209-J7 FAG

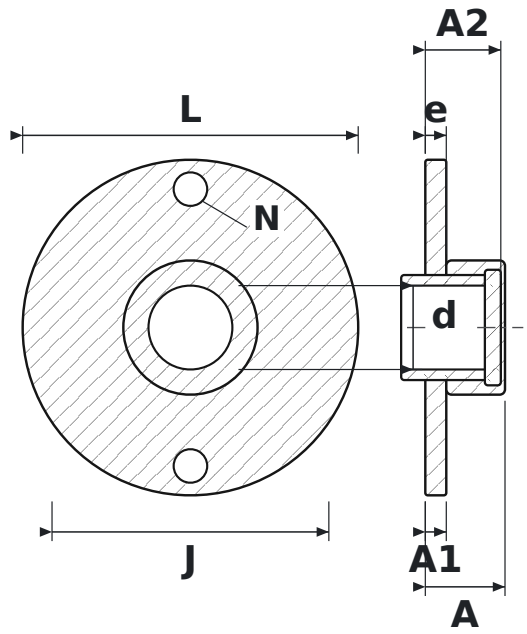


## DIMENSIONS

| | | |
|---|---|---|
| **d** | shaft diameter | **40 mm** |
| **L** | housing length | **160 mm** |
| **J** | bolt hole spacing | **132 mm** |
| **N** | bolt hole diameter | **16 mm** |
| **A** | overall housing width (from mounting face) | **38 mm** |
| **A1** | flange thickness | **10 mm** |
| **A2** | overall length incl. protruding inner ring | **36 mm** |
| **e** | mounting face to bearing centre | **10 mm** |

## SPECIFICATIONS

| | |
|---|---|
| Manufacturer | **FAG** |
| Manufacturer designation | **UKFC209-J7** |
| Rolling elements | **single-row ball bearing** |