Bearing unit UKFL206-J7 FAG

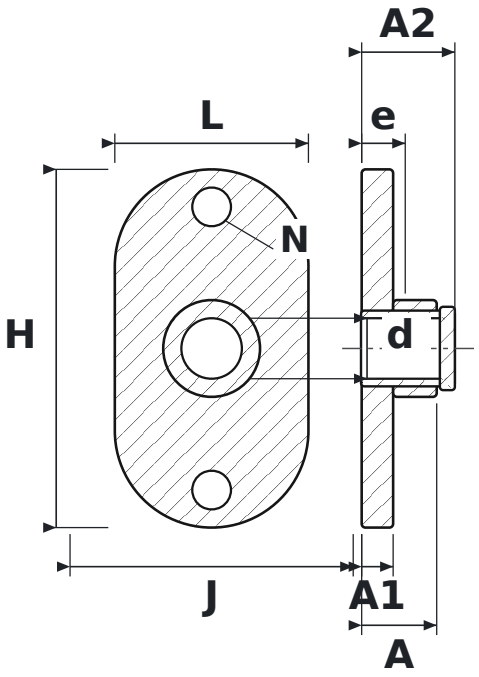

DIMENSIONS

d	shaft diameter	**25 mm**
L	housing length	**80 mm**
H	housing height	**148 mm**
J	bolt hole spacing	**117 mm**
N	bolt hole diameter	**16 mm**
A	overall housing width (from mounting face)	**31 mm**
A1	flange thickness	**13 mm**
A2	overall length incl. protruding inner ring	**38.5 mm**
e	mounting face to bearing centre	**18 mm**

SPECIFICATIONS

Manufacturer	**FAG**
Manufacturer designation	**UKFL206-J7**
Rolling elements	**single-row ball bearing**