Bearing unit UKFL207 NSK

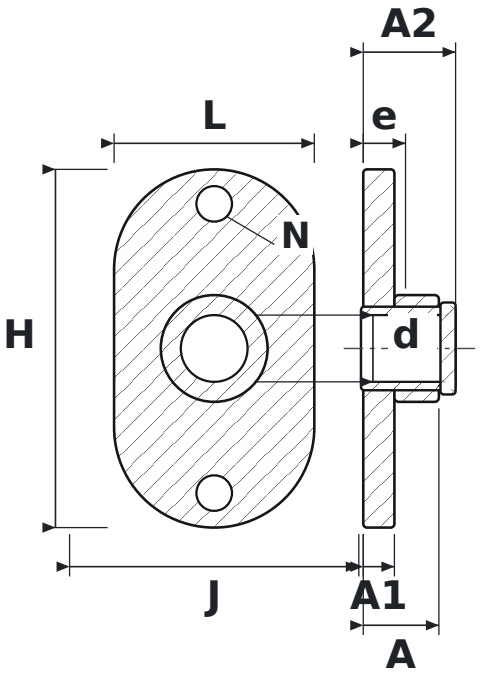

DIMENSIONS

d	shaft diameter	**30 mm**
L	housing length	**90 mm**
H	housing height	**161 mm**
J	bolt hole spacing	**130 mm**
N	bolt hole diameter	**16 mm**
A	overall housing width (from mounting face)	**34 mm**
A1	flange thickness	**14 mm**
A2	overall length incl. protruding inner ring	**41.5 mm**
e	mounting face to bearing centre	**19 mm**

SPECIFICATIONS

Manufacturer	**NSK**
Manufacturer designation	**UKFL207**
Rolling elements	**single-row ball bearing**
Mass	**1.13 kg**