Bearing unit UKFL212 D1+H2312 RHP

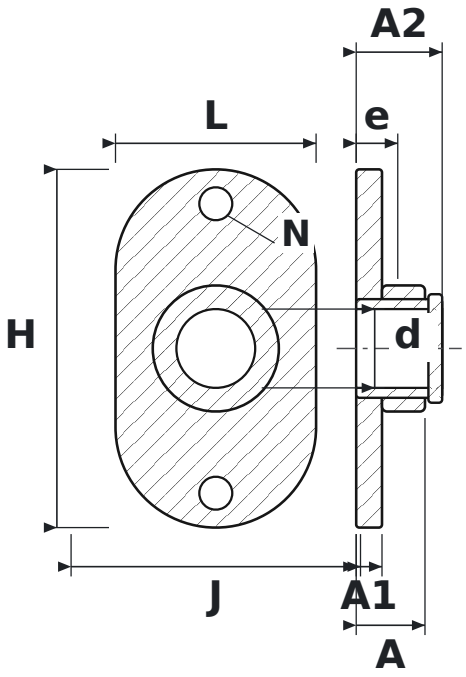

DIMENSIONS

d	shaft diameter	**55 mm**
L	housing length	**140 mm**
H	housing height	**250 mm**
J	bolt hole spacing	**202 mm**
N	bolt hole diameter	**23 mm**
A	overall housing width (from mounting face)	**48 mm**
A1	flange thickness	**18 mm**
A2	overall length incl. protruding inner ring	**60 mm**
e	mounting face to bearing centre	**29 mm**

SPECIFICATIONS

Manufacturer	**RHP**
Manufacturer designation	**UKFL212 D1+H2312**
Rolling elements	**single-row ball bearing**