Bearing unit UKP205 D1+H2305 RHP

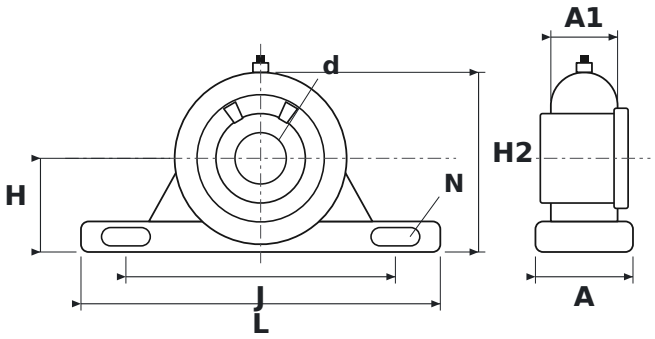

DIMENSIONS

d	shaft diameter	**20 mm**
L	housing length	**140 mm**
H	shaft centre height	**36.5 mm**
H2	total height	**70 mm**
J	bolt hole spacing	**105 mm**
N	bolt hole diameter	**13 mm**
A	housing width	**38 mm**
A1	upper housing width (at the bearing)	**26 mm**

SPECIFICATIONS

Manufacturer	**RHP**
Manufacturer designation	**UKP205 D1+H2305**
Rolling elements	**single-row ball bearing**