Bearing unit UKP206 J KOYO

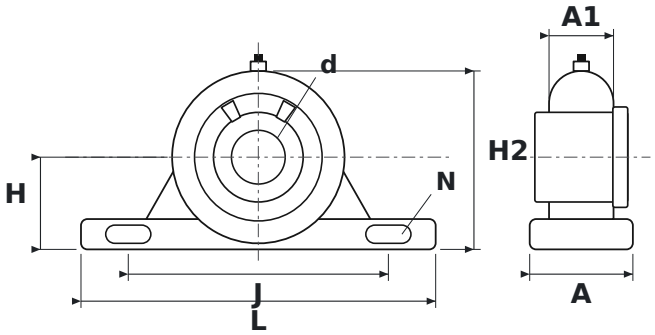

DIMENSIONS

d	shaft diameter	**25 mm**
L	housing length	**165 mm**
H	shaft centre height	**42.9 mm**
H2	total height	**83 mm**
J	bolt hole spacing	**121 mm**
N	bolt hole diameter	**17 mm**
A	housing width	**48 mm**
A1	upper housing width (at the bearing)	**30 mm**

SPECIFICATIONS

Manufacturer	**KOYO**
Manufacturer designation	**UKP206 J**
Rolling elements	**single-row ball bearing**