Bearing unit UKP207 NKE

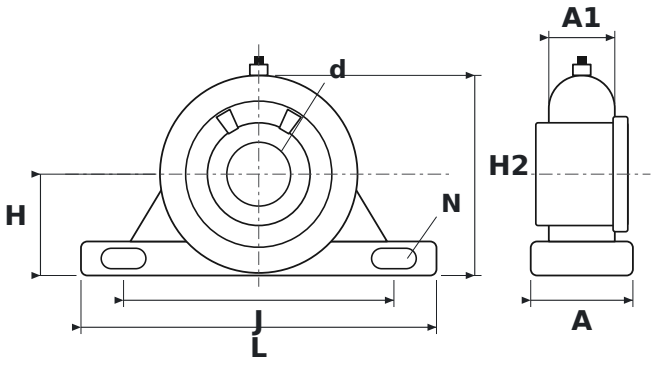

DIMENSIONS

d	shaft diameter	**30 mm**
L	housing length	**167 mm**
H	shaft centre height	**47.6 mm**
H2	total height	**94 mm**
J	bolt hole spacing	**127 mm**
N	bolt hole diameter	**17 mm**
A	housing width	**48 mm**
A1	upper housing width (at the bearing)	**31 mm**

SPECIFICATIONS

Manufacturer	**NKE**
Manufacturer designation	**UKP207**
Rolling elements	**single-row ball bearing**