Bearing unit UKP209 NKE

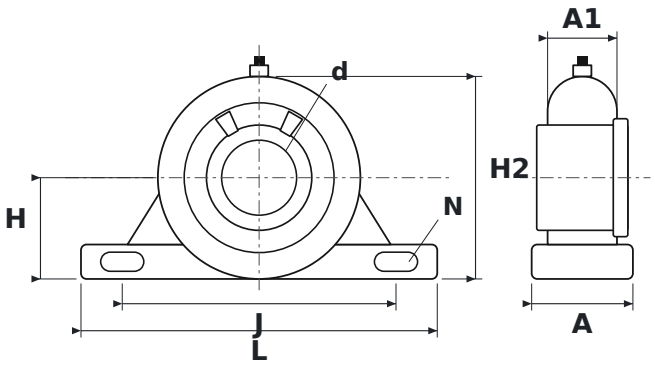

DIMENSIONS

d	shaft diameter	**40 mm**
L	housing length	**190 mm**
H	shaft centre height	**54 mm**
H2	total height	**108 mm**
J	bolt hole spacing	**146 mm**
N	bolt hole diameter	**17 mm**
A	housing width	**54 mm**
A1	upper housing width (at the bearing)	**37 mm**

SPECIFICATIONS

Manufacturer	**NKE**
Manufacturer designation	**UKP209**
Rolling elements	**single-row ball bearing**