Bearing unit UKP211 J KOYO

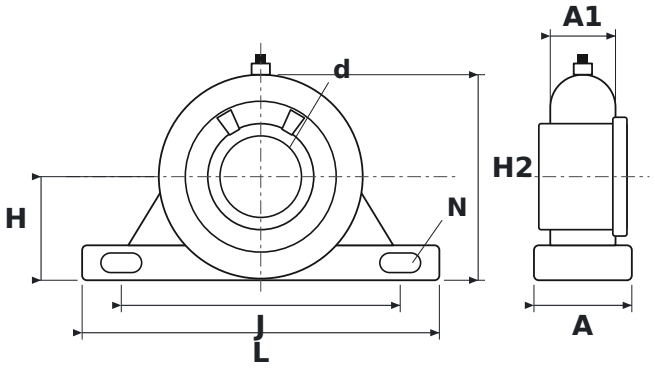

DIMENSIONS

d	shaft diameter	**50 mm**
L	housing length	**219 mm**
H	shaft centre height	**63.5 mm**
H2	total height	**126 mm**
J	bolt hole spacing	**171 mm**
N	bolt hole diameter	**20 mm**
A	housing width	**60 mm**
A1	upper housing width (at the bearing)	**40 mm**

SPECIFICATIONS

Manufacturer	**KOYO**
Manufacturer designation	**UKP211 J**
Rolling elements	**single-row ball bearing**