Bearing unit UKP216 D1 NSK

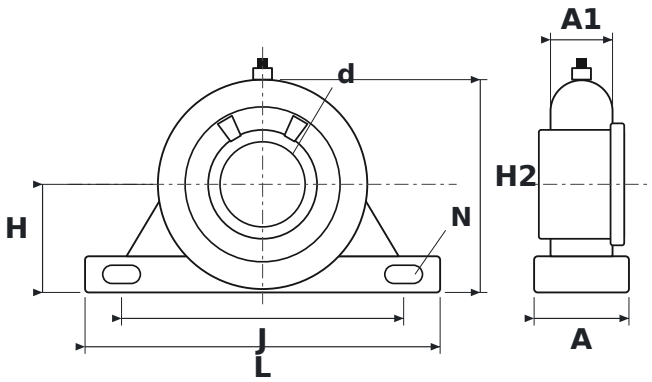

DIMENSIONS

d	shaft diameter	**70 mm**
L	housing length	**292 mm**
H	shaft centre height	**88.9 mm**
H2	total height	**175 mm**
J	bolt hole spacing	**232 mm**
N	bolt hole diameter	**25 mm**
A	housing width	**78 mm**
A1	upper housing width (at the bearing)	**51 mm**

SPECIFICATIONS

Manufacturer	**NSK**
Manufacturer designation	**UKP216 D1**
Rolling elements	**single-row ball bearing**