Bearing unit UKP217 H SNR

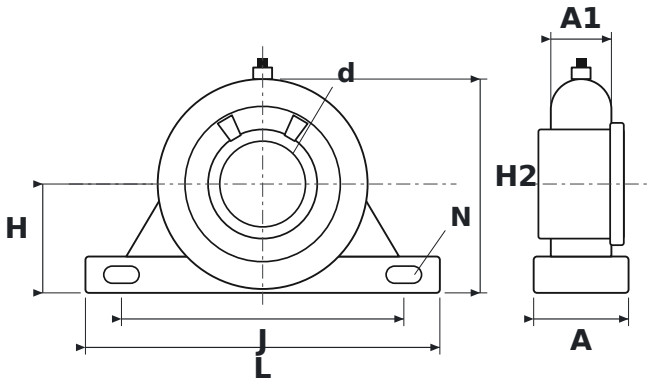

DIMENSIONS

d	shaft diameter	**75 mm**
L	housing length	**310 mm**
H	shaft centre height	**95.2 mm**
H2	total height	**187 mm**
J	bolt hole spacing	**247 mm**
N	bolt hole diameter	**25 mm**
A	housing width	**83 mm**
A1	upper housing width (at the bearing)	**53 mm**

SPECIFICATIONS

Manufacturer	**SNR**
Manufacturer designation	**UKP217 H**
Rolling elements	**single-row ball bearing**