Bearing unit UKP309 FYH

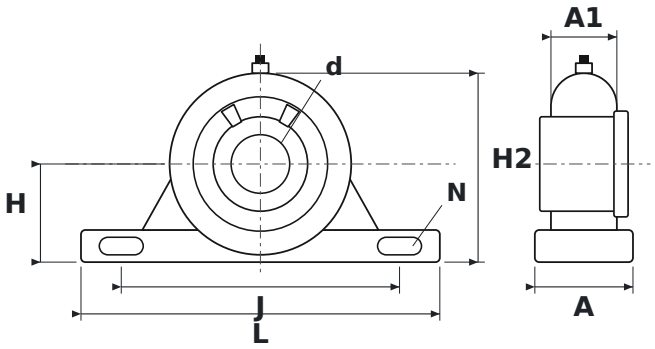

DIMENSIONS

d	shaft diameter	**40 mm**
L	housing length	**245 mm**
H	shaft centre height	**67 mm**
H2	total height	**129 mm**
J	bolt hole spacing	**190 mm**
N	bolt hole diameter	**20 mm**
A	housing width	**67 mm**
A1	upper housing width (at the bearing)	**45 mm**

SPECIFICATIONS

Manufacturer	**FYH**
Manufacturer designation	**UKP309**
Rolling elements	**single-row ball bearing**