Bearing unit UKP312 FYH

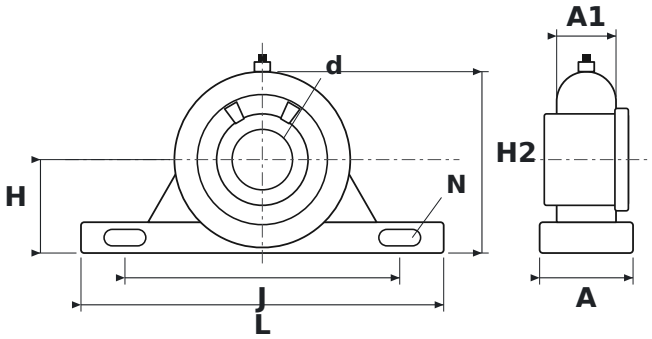

DIMENSIONS

d	shaft diameter	**55 mm**
L	housing length	**330 mm**
H	shaft centre height	**85 mm**
H2	total height	**165 mm**
J	bolt hole spacing	**250 mm**
N	bolt hole diameter	**25 mm**
A	housing width	**85 mm**
A1	upper housing width (at the bearing)	**54 mm**

SPECIFICATIONS

Manufacturer	**FYH**
Manufacturer designation	**UKP312**
Rolling elements	**single-row ball bearing**