Bearing unit UKP313 D1 NTN

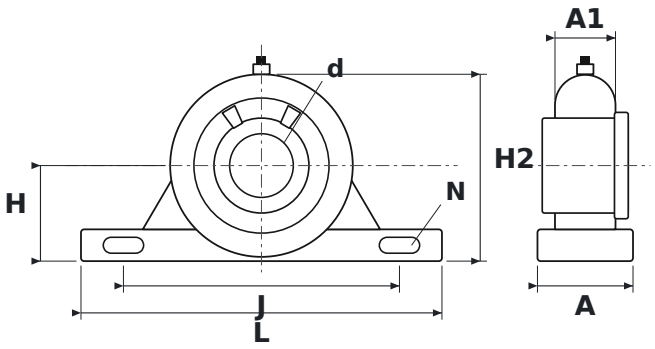

DIMENSIONS

d	shaft diameter	**60 mm**
L	housing length	**340 mm**
H	shaft centre height	**90 mm**
H2	total height	**176 mm**
J	bolt hole spacing	**260 mm**
N	bolt hole diameter	**25 mm**
A	housing width	**90 mm**
A1	upper housing width (at the bearing)	**57 mm**

SPECIFICATIONS

Manufacturer	**NTN**
Manufacturer designation	**UKP313 D1**
Rolling elements	**single-row ball bearing**