Bearing unit UKP315 D1 NTN

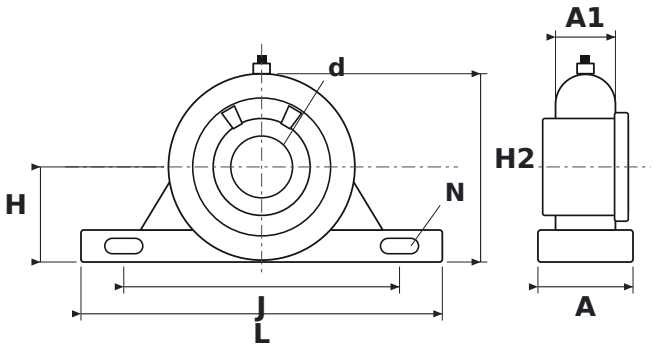

DIMENSIONS

d	shaft diameter	**65 mm**
L	housing length	**380 mm**
H	shaft centre height	**100 mm**
H2	total height	**198 mm**
J	bolt hole spacing	**290 mm**
N	bolt hole diameter	**27 mm**
A	housing width	**100 mm**
A1	upper housing width (at the bearing)	**63 mm**

SPECIFICATIONS

Manufacturer	**NTN**
Manufacturer designation	**UKP315 D1**
Rolling elements	**single-row ball bearing**
Mass	**13.65 kg**