# Bearing unit UKP317 D1 NTN

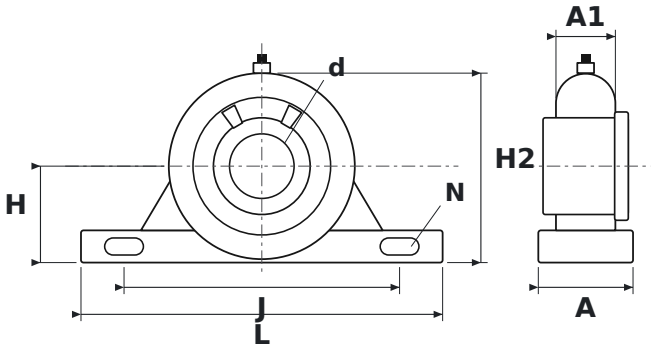


## DIMENSIONS

| | | |
|---|---|---|
| **d** | shaft diameter | **75 mm** |
| **L** | housing length | **420 mm** |
| **H** | shaft centre height | **112 mm** |
| **H2** | total height | **220 mm** |
| **J** | bolt hole spacing | **320 mm** |
| **N** | bolt hole diameter | **33 mm** |
| **A** | housing width | **110 mm** |
| **A1** | upper housing width (at the bearing) | **69 mm** |

## SPECIFICATIONS

| | |
|---|---|
| Manufacturer | **NTN** |
| Manufacturer designation | **UKP317 D1** |
| Rolling elements | **single-row ball bearing** |