Bearing unit UKP317 NKE

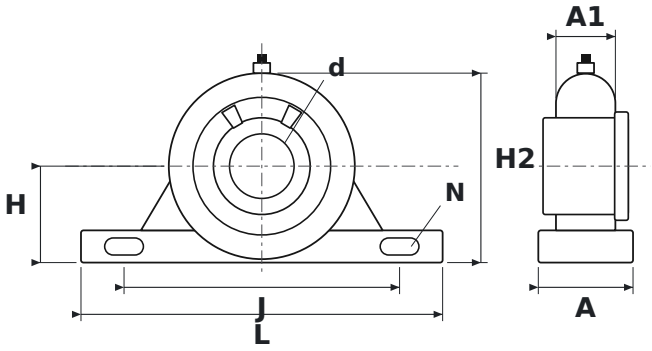

DIMENSIONS

d	shaft diameter	**75 mm**
L	housing length	**420 mm**
H	shaft centre height	**112 mm**
H2	total height	**220 mm**
J	bolt hole spacing	**320 mm**
N	bolt hole diameter	**33 mm**
A	housing width	**110 mm**
A1	upper housing width (at the bearing)	**69 mm**

SPECIFICATIONS

Manufacturer	**NKE**
Manufacturer designation	**UKP317**
Rolling elements	**single-row ball bearing**